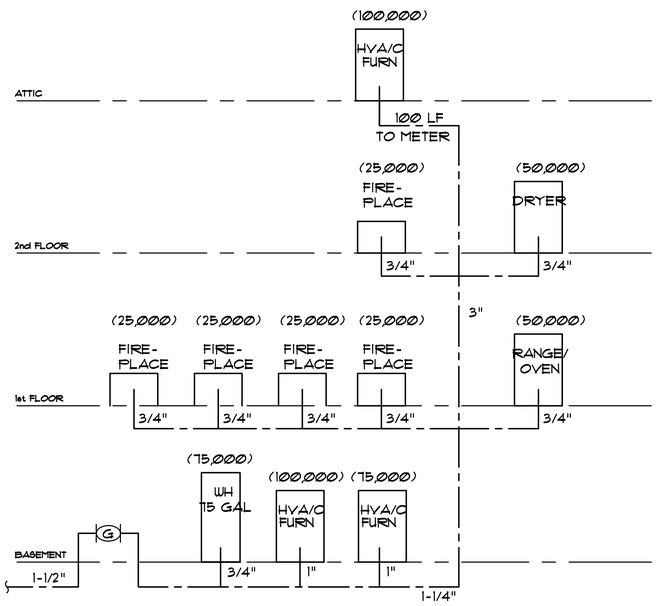

GAS RISER DIAGRAM

NO SCALE

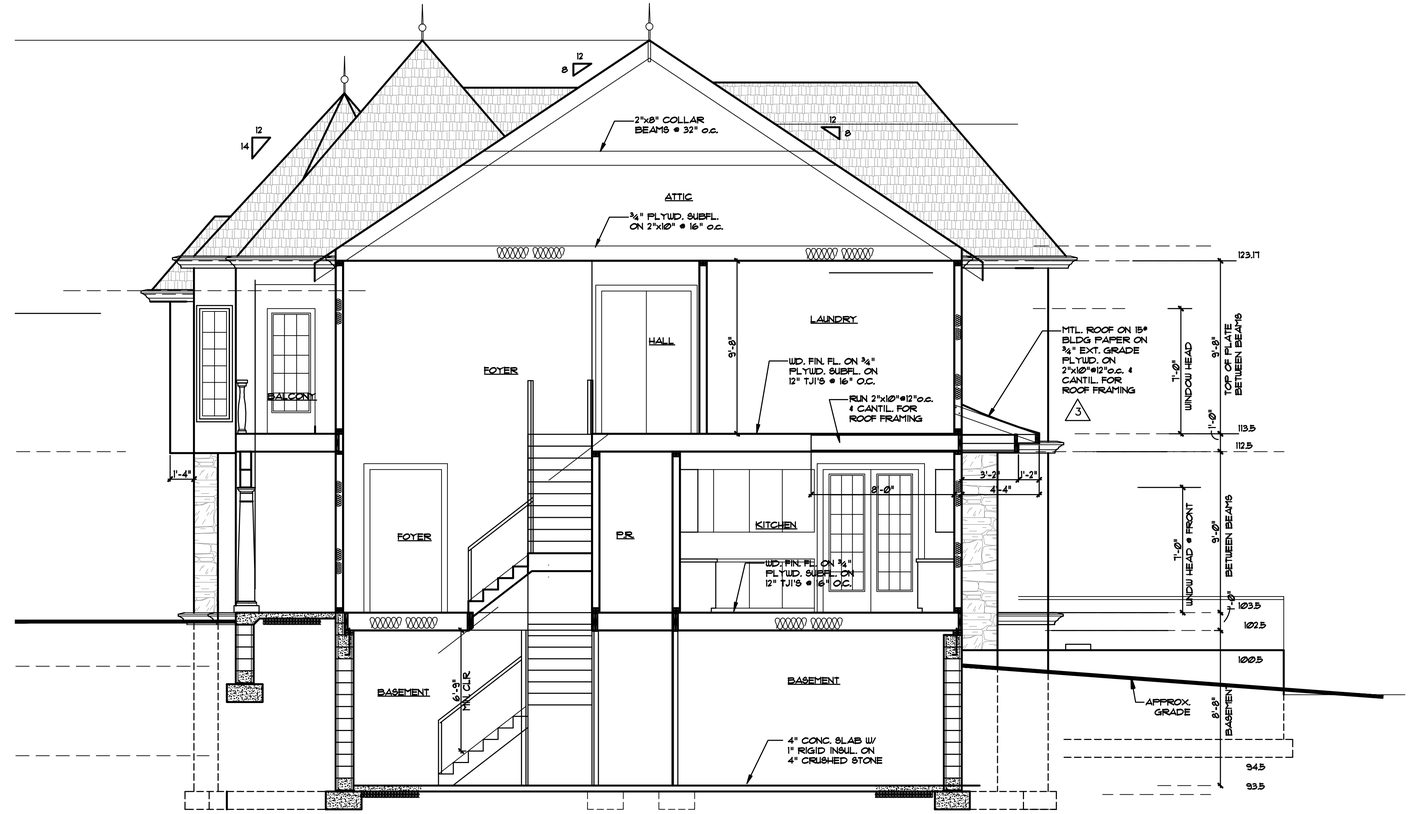

SECTION

SCALE : 1/4" = 1'-0"

Prescriptive Packages 5000 Degree-Day Region

Single-Family Detached

Package	Maximum Glazing Area Percent[1]	Maximum Glazing U-Value[2]	Minimum Ceiling R-Value[3]	Minimum Wall R-Value[4]	Minimum Floor R-Value[5]	Minimum Basement Wall R-Value[6]	Minimum Slab Perimeter R-Value[7]	Minimum Crawl Space Wall R-Value[8]	Heating/Cooling Equipment Efficiency[9]	
1	11%	0.50	30	11	19	0	4	19	High Heating	UCC Basement Tradeoff
2	13%	0.50	30	15	19	0	4	19	High Heating	
3	13%	0.45	30	13	19	0	4	19	High Heating	
4	13%	0.40	30	11	19	0	4	19	High Heating	
5	13%	0.35	19	11	19	0	4	19	High Heating	
6	13%	0.30	19	11	19	0	4	19	High Heating	
7	15%	0.45	38	15	30	0	4	19	High Heating	
8	15%	0.40	30	13	19	0	4	19	High Heating	
9	15%	0.35	30	11	19	0	4	19	High Heating	
10	15%	0.30	19	11	19	0	4	19	High Heating	
11	17%	0.40	38	15	30	0	4	19	High Heating	
12	17%	0.35	30	13	19	0	4	19	High Heating	
13	17%	0.30	19	13	19	0	4	19	High Heating	
14	12%	0.65	38	19	19	9	7	17	Normal	Basement Wall Tradeoff Not Applied
15	12%	0.45	30	13	19	9	6	17	Normal	
16	15%	0.55	38	19	21	10	*	22	Normal	
17	15%	0.40	38	13	19	9	5	16	Normal	
18	18%	0.45	38	19	19	9	7	17	Normal	
19	18%	0.35	38	13	19	9	6	17	Normal	
20	22%	0.40	49	21	19	9	6	17	Normal	
21	12%	0.75	38	11	19	8	2	17	High Heating	
22	12%	0.65	38	13	11	6	0	8	High Heating	
23	15%	0.65	30	13	19	9	2	22	High Heating	
24	15%	0.50	30	13	11	6	0	8	High Heating	
25	18%	0.55	30	13	19	9	2	22	High Heating	
26	18%	0.45	38	13	11	5	0	8	High Heating	
27	22%	0.55	38	17	19	9	2	22	High Heating	
28	22%	0.40	30	13	13	6	2	10	High Heating	
29	12%	0.75	30	13	15	7	2	14	High Heat/Cool	
30	12%	0.65	26	13	13	6	0	10	High Heat/Cool	
31	15%	0.70	30	15	19	9	2	22	High Heat/Cool	
32	15%	0.55	26	13	13	5	2	10	High Heat/Cool	
33	18%	0.65	38	19	15	7	2	14	High Heat/Cool	
34	18%	0.50	38	13	13	6	0	10	High Heat/Cool	
35	22%	0.60	38	17	26	11	8	*	High Heat/Cool	
36	22%	0.45	38	13	15	7	2	12	High Heat/Cool	

9.7% 0.35 33.5 17.59 33.60 13.97 5.4 N/A

* Indicates that the package cannot be used with that foundation type

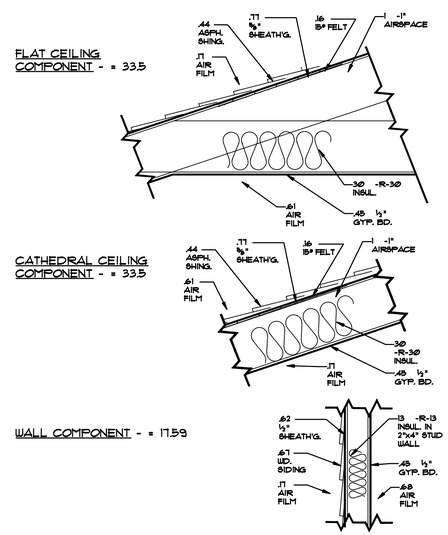

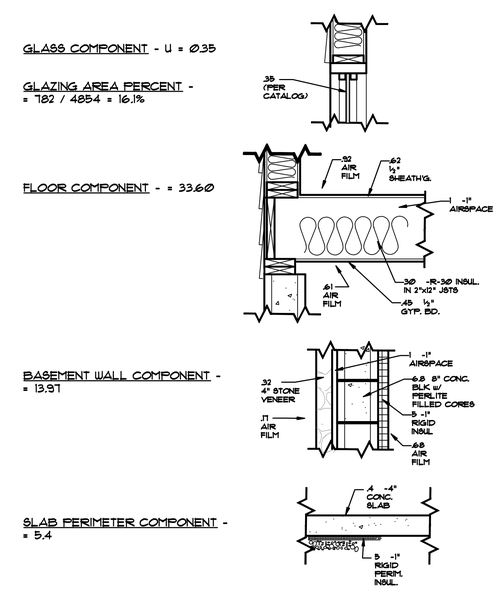

4	6-24-10	MISC. REVISIONS PER OWNER BASEMENT, FRAMING, ETC.
3	6-15-10	MISC. REVISIONS PER OWNER PATIO, FRAMING, ETC.
1	6-2-10	MISCELLANEOUS REVISIONS
	6-24-09	ISSUED FOR PERMIT

HEINTZ & FIORE • LLC
ARCHITECTS • AIA
87 woodland road
short hills • new jersey • 07078
973•467•1240 fax 973•376•0963

BRONSTEIN RESIDENCE
5 RICHARD DRIVE
SHORT HILLS, NJ

drawing title :
BUILDING SECTION
GAS RISER DIAGRAM
ENERGY CALCULATIONS

ROBERT B. HEINTZ • AIA
architect : NJ – C 4352
planner : NJ – LI 01553
DONALD R. FIORE • AIA
architect : NJ – AI 10410

job no. : 2916
date : 6-24-09
scale : AS NOTED
drawn by : JSK
drawing : A-8